SPC Downtown

SPC Downtown
244 Second Ave. N
St. Petersburg

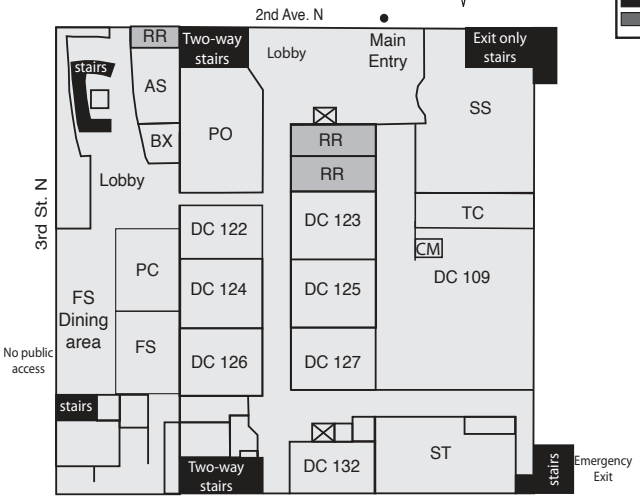

FIRST FLOOR

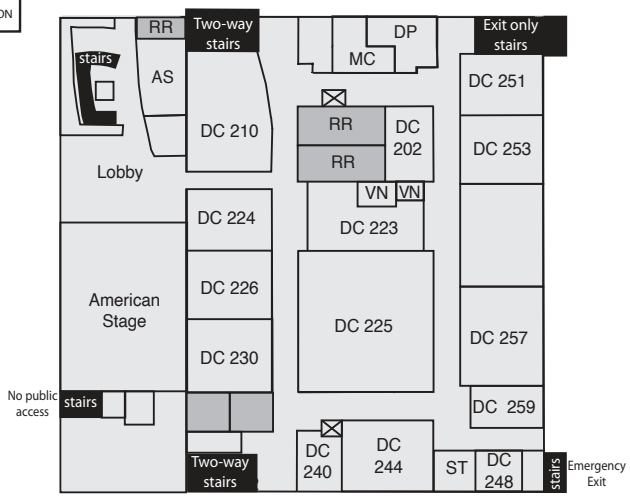

SECOND FLOOR

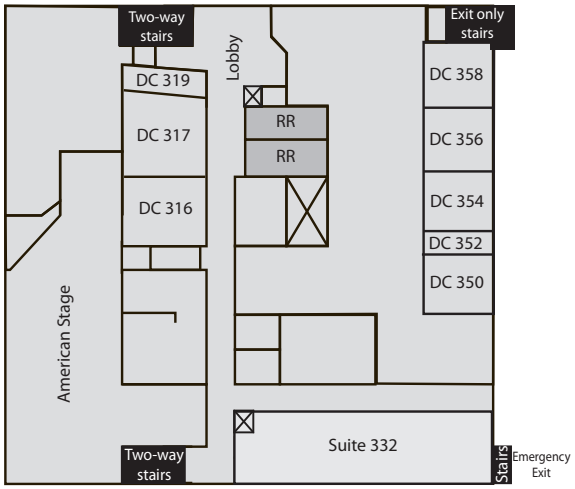

THIRD FLOOR

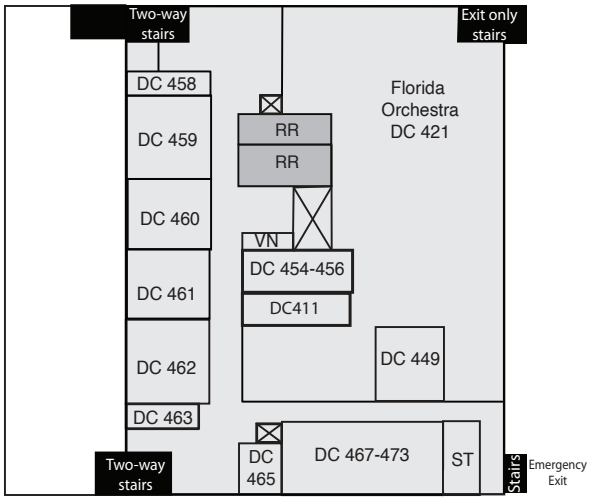

FOURTH FLOOR

SPC Downtown Room Codes

Classrooms

DC 122-127	- Classrooms
DC 224	- Classroom
DC 226, 230	- Classrooms
DC 251	- Classroom
DC 253	- Classroom
DC 257	- Classroom
DC 316-317	- Classrooms
DC 460, 461	- Classrooms

SPC Downtown parking map

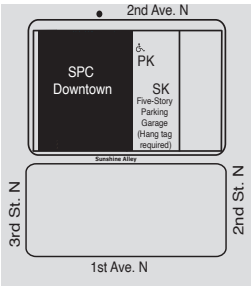

Numbered rooms

DC 109	- Learning Center
DC 132	- GED Program
DC 202	- Conference room
DC 210	- Community room
DC 223	- Student Lounge
DC 225	- Student Life & Leadership, Student Government, Outreach
DC 240	- Science Prep
DC 244	- Science Lab
DC 248	- Staff offices
DC 259	- Staff offices
DC 319	- Faculty offices
Suite 332	- American Stage offices
DC 352	- Offices
DC 350, 354, 356 & 358	- Classrooms
DC 411	- Lactation Room
DC 421	- Florida Orchestra offices
DC 449	- Staff Wellness Center
DC 454-456	- Staff offices
DC 458 & 463	- Science Prep
DC 459 & 462	- Science Labs
DC 465	- Technology Services (TS)
DC 467-473	- Faculty offices

Un-numbered rooms

AS	- American Stage offices
BX	- Box office
DP	- Downtown Partnership offices
CM	- Copy machine
FS	- Food service (cafe´)
MC	- Marine Exporation Center office
PC	- Provost Conference Room
PK	- Student parking
PO	- Provost Office
RR	- Restroom
SK	- Staff parking
SS	- Student Services: Admissions, Advising, Business Office, Career Services Accessibilty Services, Financial Aid, Registration
ST	- Storage
TC	- Testing Center
VN	- Vending

SPC St. Petersburg College

DT_7-8-25